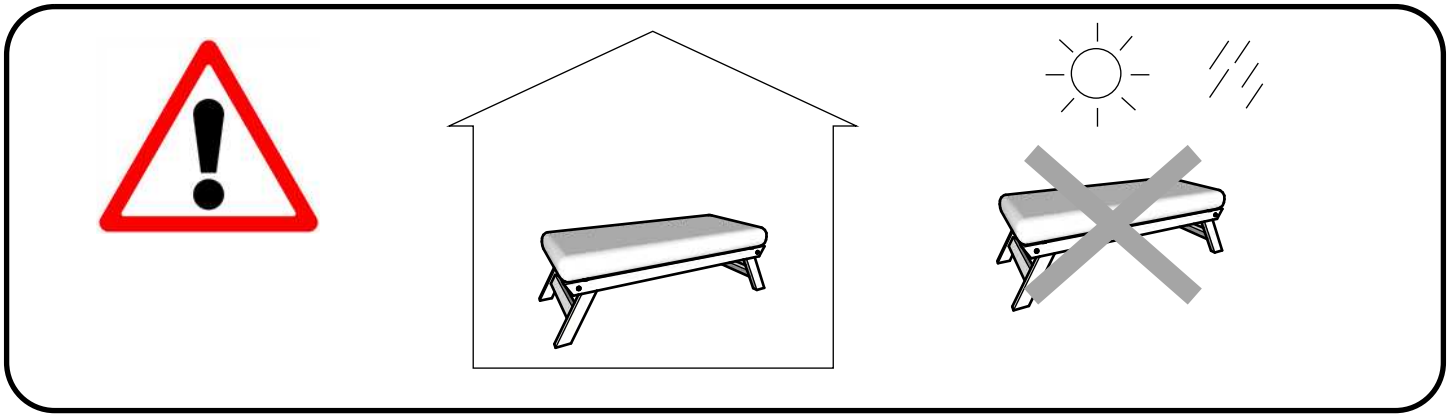

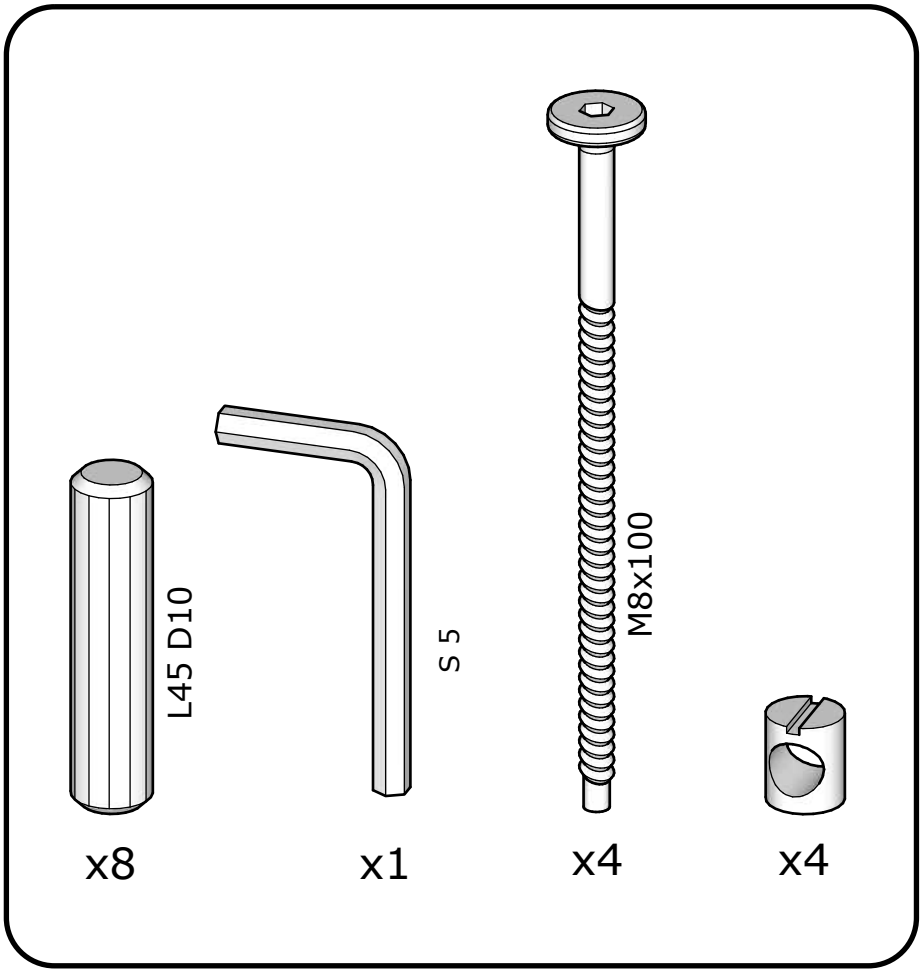
L45 D10
S 5
M8x100
x8
x1
x4
x4



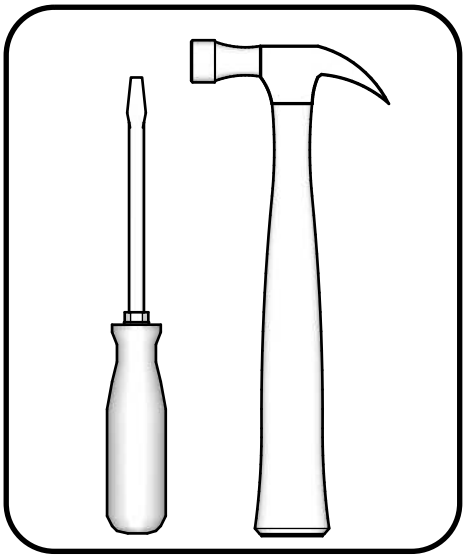

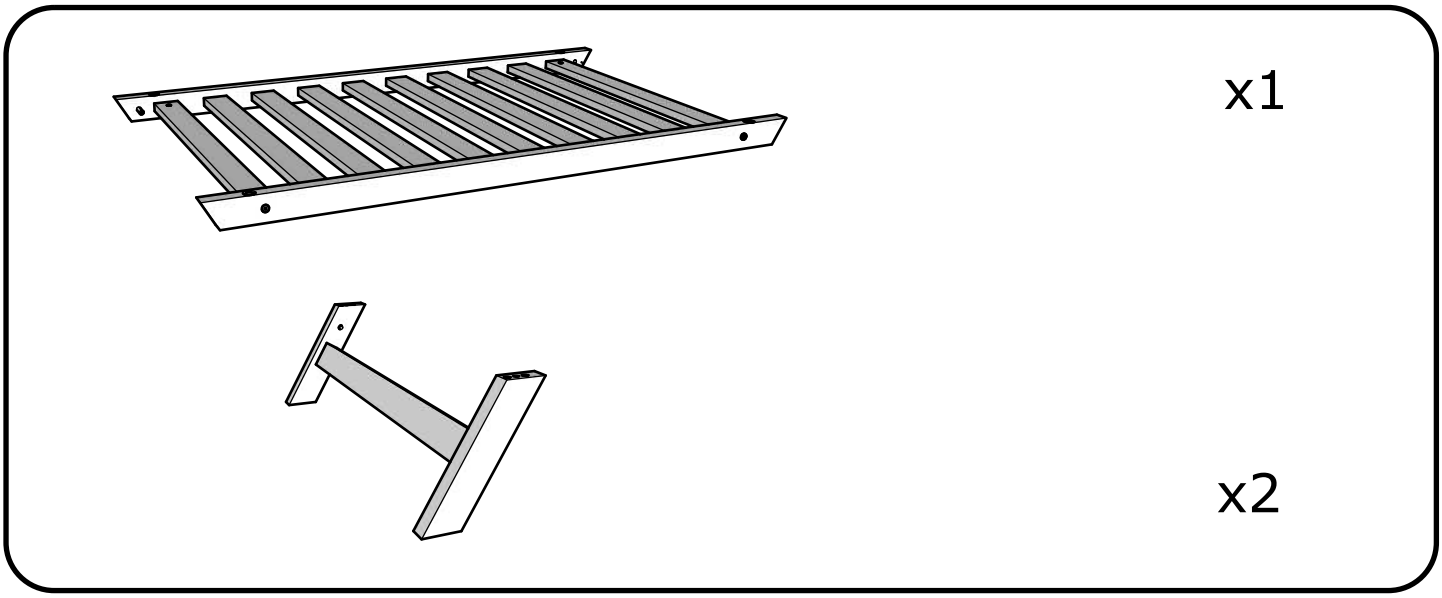
x1
x2

1

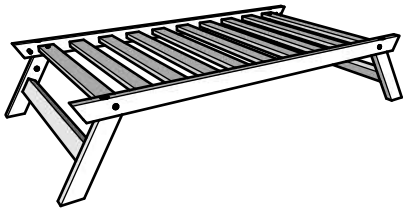

1

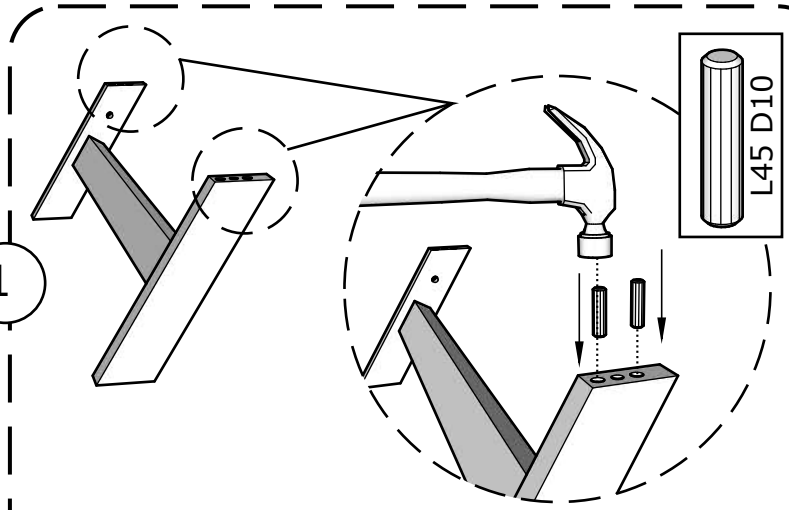

2

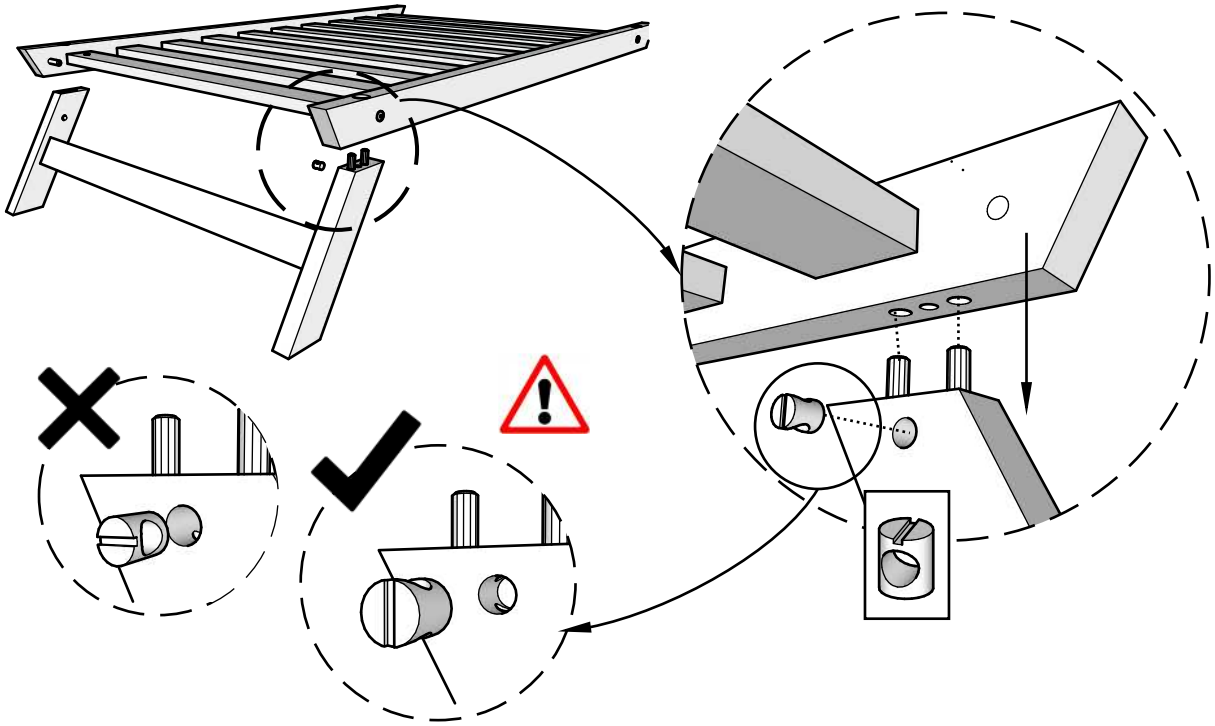

3

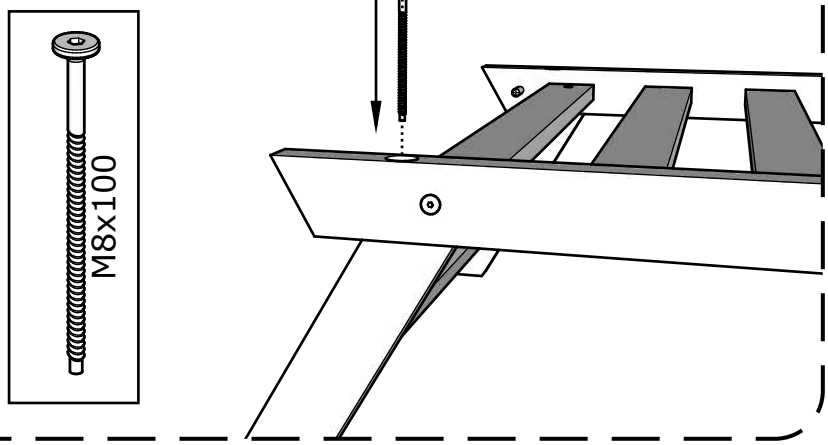

ALLEGRO
bench

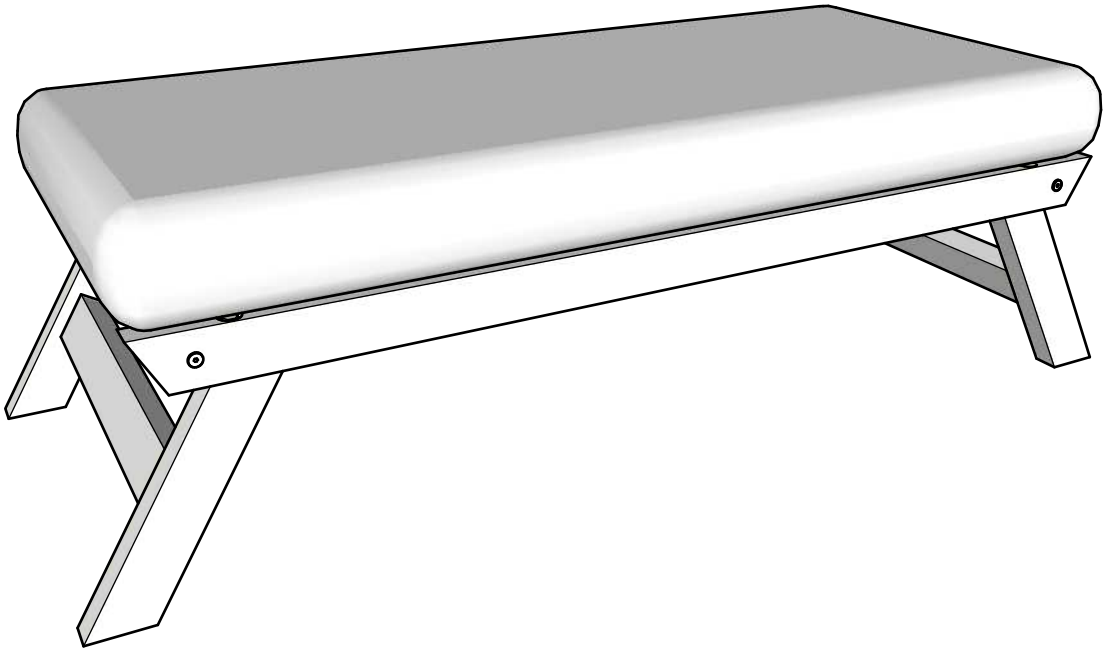

WOODEN FURNITURE PRODUCTION